*SR-20 series is a **long-life reliable solution** for your needs. Its **robust aluminum design** and the **wide range of configurations** available makes it the perfect choice when great performances are required.*

SR-20

TECHNICAL SPECIFICATIONS

Category	Classic AGITATOR.
Windings	Single-phase motor. Insulation Class F.
Motor body	Extruded aluminium casing.
Protection	IP 44 ingress protection rating.
Safety	Built-in thermal motor protection system.
Ball bearings	NSK and SKF (long-life) self-lubricant bearings or equivalent, in semi-rigid noise-damping housings.
Motor shaft	AISI 303 INOX steel.
Fastening parts	INOX steel or corrosion-resistant materials.
Motor parts	Thermoplastic motor parts resistant to high temperature.
Cooling system	Air cooled pump with a suction speed of 3,1 m/s.
Operation	Power supply 220-240 Volts - 24 hours a day non stop. Clean non drinkable water only.
Regulations	Complying with EN60335-2-41:2003/A2:2010 and WEEE/RoHs directives.
Note	Read the instruction booklet for correct set up and use.

WITHOUT FIXING PLATE

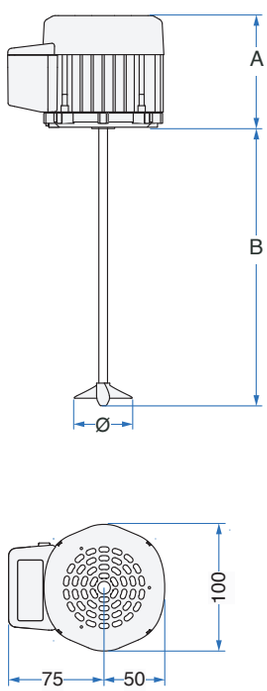

STANDARD VERSION

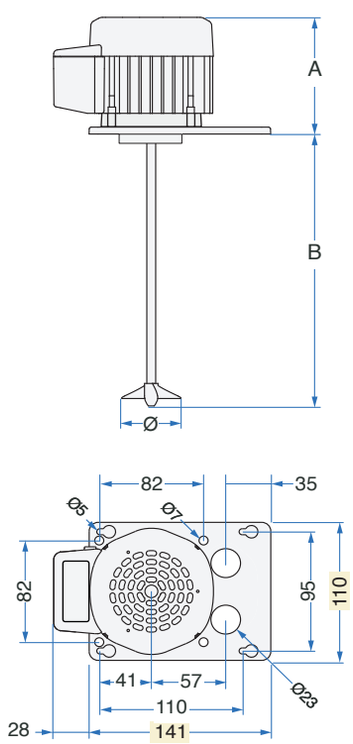

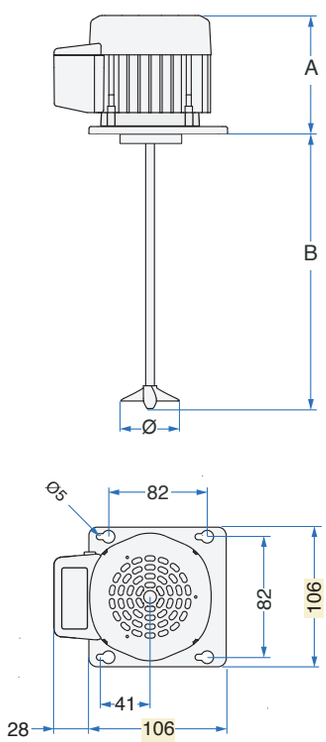

COMPACT VERSION

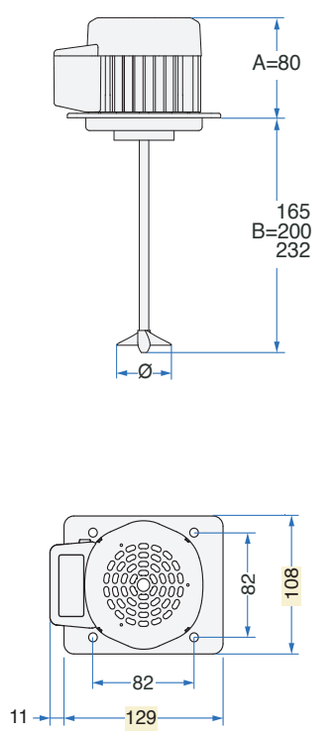

TYPE	Volt	Hz	Amp	Watt	RPM	A	B	Propeller Ø [mm]		Weight [Kg]
SR-20	220-240	50-60	0,14-0,16	33-37	2930-3480	90	153/188/218	40x15°	2 Blades	1,4
SR-20	220-240	50-60	0,14-0,16	35-38	2930-3480	90	155/190/220	40x30°	2 Blades	1,4
SR-20	220-240	50-60	0,16-0,20	37-41	2900-3430	90	156/191/221	45x30°	2 Blades	1,4
SR-20	220-240	50-60	0,18-0,24	43-56	2820-3200	90	157/192/222	50x30°	2 Blades	1,4
SR-20	220-240	50-60	0,14-0,16	33-37	2930-3480	90	155/190/220	50x15°	2 Blades	1,4
SR-20	220-240	50-60	0,14-0,18	35-39	2913-3450	90	156/191/221	55x15°	2 Blades	1,4
SR-20	220-240	50-60	0,16-0,20	36-43	2890-3420	90	161/196/226	62x15°	2 Blades	1,4
SR-20	220-240	50-60	0,16-0,20	36-43	2890-3420	90	163/198/228	66x15°	2 Blades	1,4

Rev. 21-02 Performance and electrical data have been tested at 20°C with clean water only. The company reserves the right to modify specifications without prior notice.

© SABER SRL 2024 - ALL RIGHTS RESERVED - REGISTERED DESIGN - www.saberpumps.com